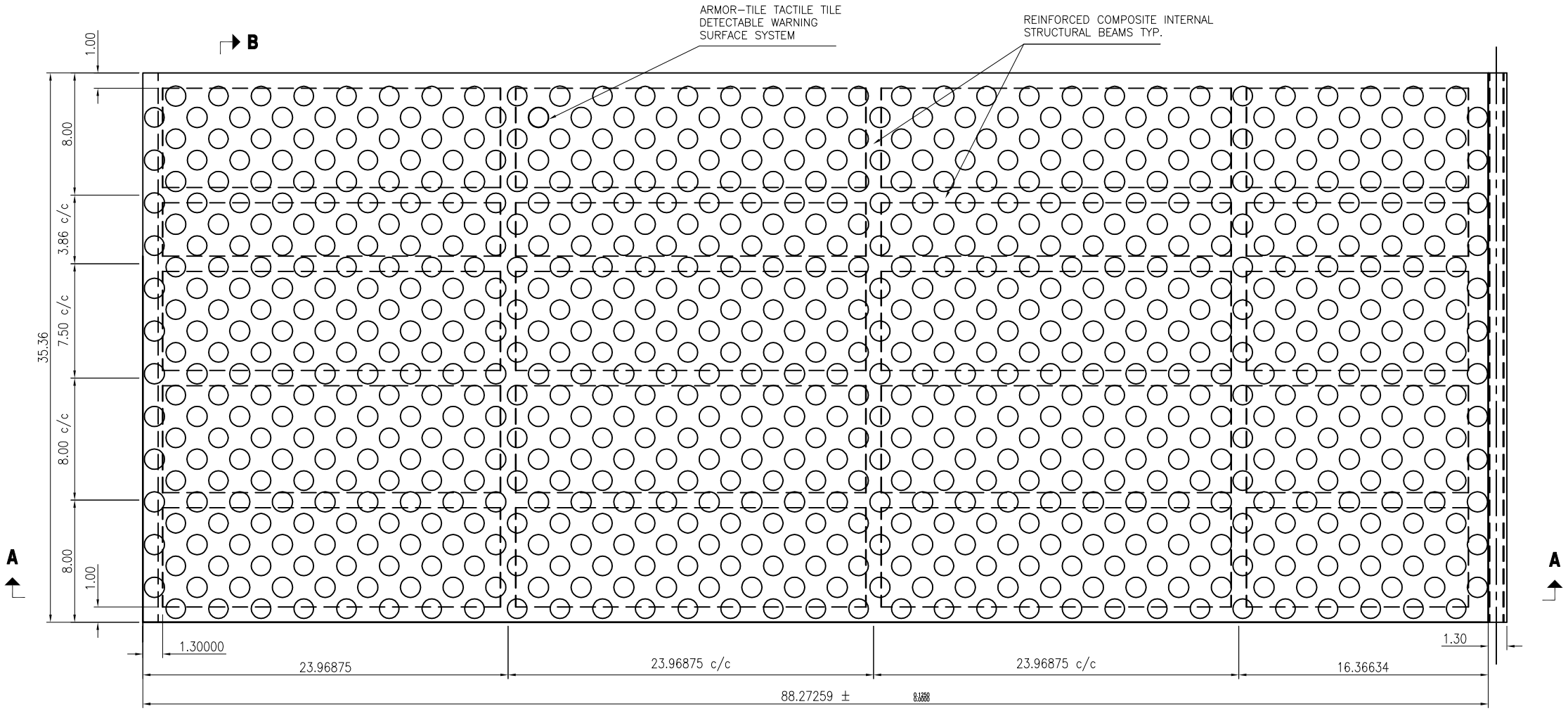

A1 PLAN

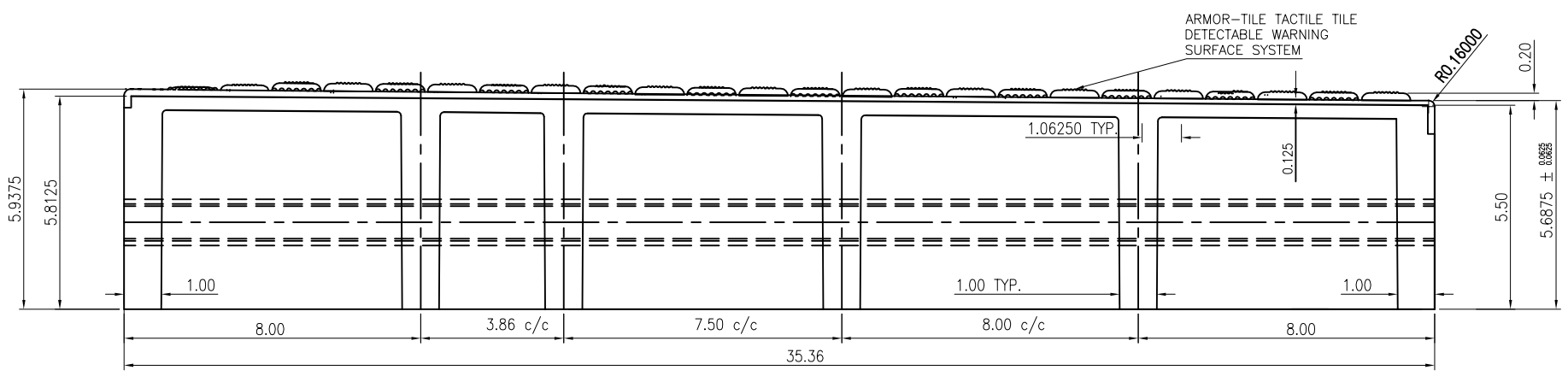

SECTION B-B (SCALE 1:2)

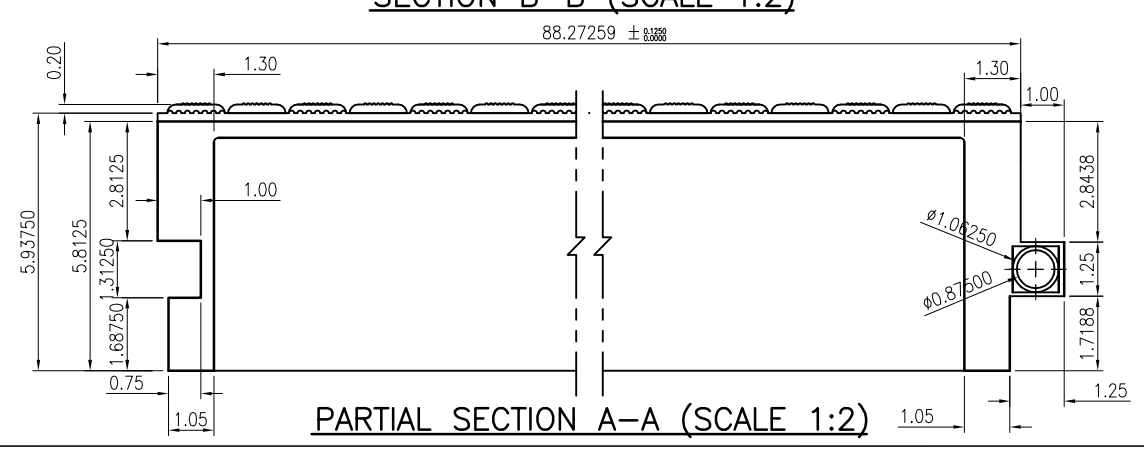

PARTIAL SECTION A-A (SCALE 1:2)

ENGINEERED PLASTICS

© 2006 ENGINEERED PLASTICS
CONFIDENTIAL AND PROPRIETARY DOCUMENT
ANY ONE OR MORE OF THE FOLLOWING
PATENTS MAY APPLY
U.S PATENT NO. 5,303,669 5,775,835
6,449,790 AND 6,895,622 B2
C.D.N. PATENT NO. 2,032,532 2,070,984
US PATENTS PENDING.

Ⓓ KENNETH E. SZEKELY

MATERIAL LIST

ITEM	DESCRIPTION	PART NO.	QT'Y
1	ARMOR-DECK AT GRADE	ADG-369606	

REFERENCE DRAWINGS

DWG. NO.	DESCRIPTION

No.	DATE	REVISION	APPR.
2	02/05/07	DIMENSION CORRECTION	J.D
1	06/14/06	GENERAL REVISION	J.D

SCALE: AS NOTED (0 3 6 9 12 15)

DESIGNED BY	K.E.S.	DATE	11/10/04
DRAWN BY	D.G.	DATE	01/06/05
CHECKED BY		DATE	
PROJECT MANAGER			
TRADE	STRUCTURAL COMPOSITE	PART NO.	SEE MATERIAL LIST

MATERIAL: VITRIFIED POLYMER COMPOSITE

SUBJECT: **Armor-Deck**
STRUCTURAL COMPOSITE PLATFORM PANEL WITH ARMOR-TILE DETECTABLE WARNING SURFACE SYSTEM

PROJECT: METRA
3'-0" x 7'-4"
STRUCTURAL COMPOSITE TRANSIT PLATFORM END PANEL – LOW LEVEL PLATFORM AT GRADE WITH ARMOR TILE DETECTABLE WARNING SURFACE

DRAWING NO.	SHT. NO.	REV. NO.
ADG-368806	01	2